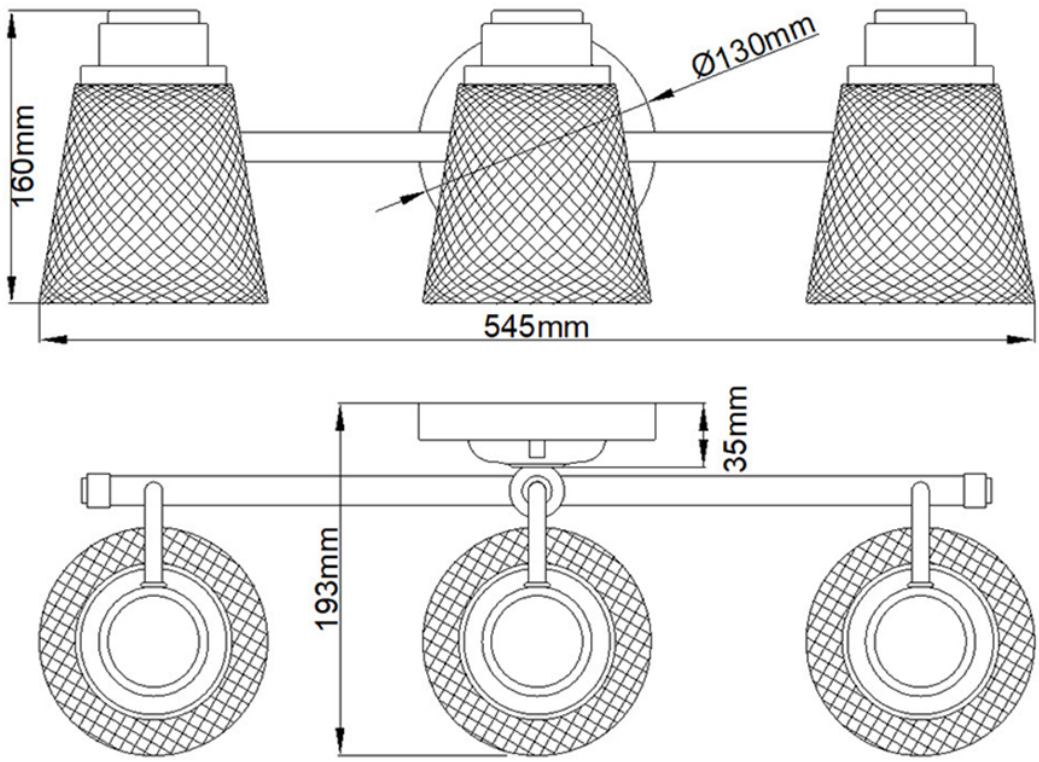Quintiesse - QN-HUDSON3-BATH - Hudson 3 Light Wall Light