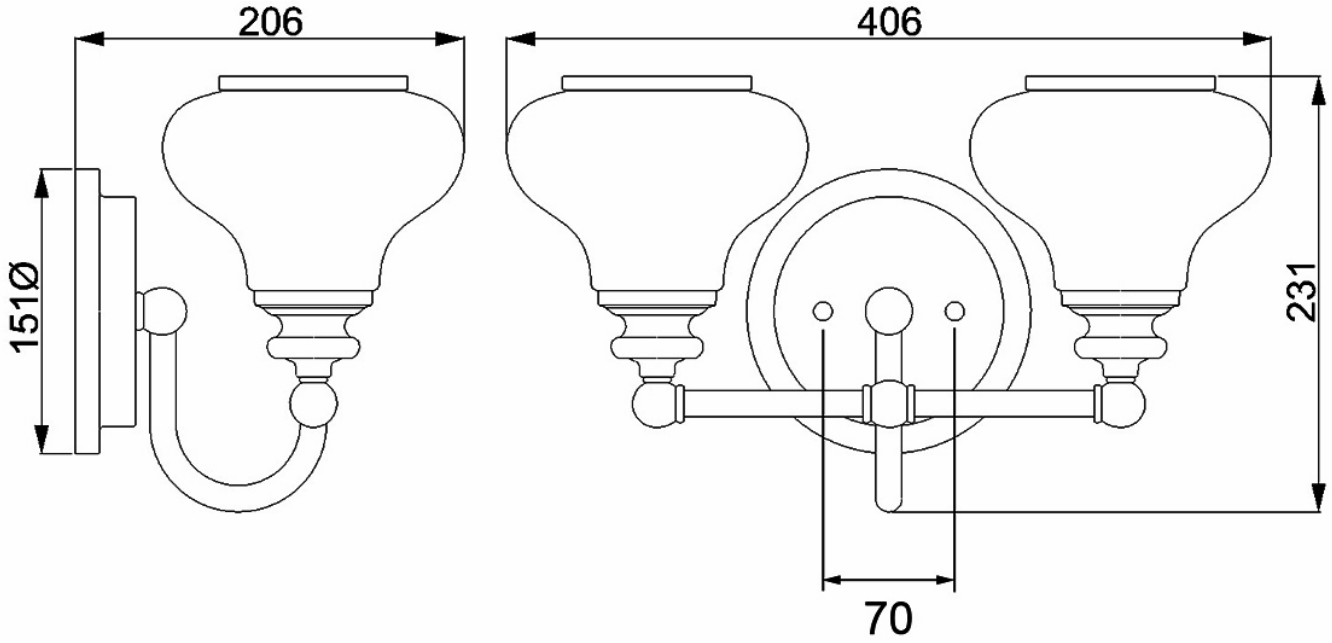Hinkley Lighting - Ainsley - HK-AINSLEY2-BATH-BB - LED Brushed Brass Opal Glass 2 Light IP44 Bathroom Wall Light