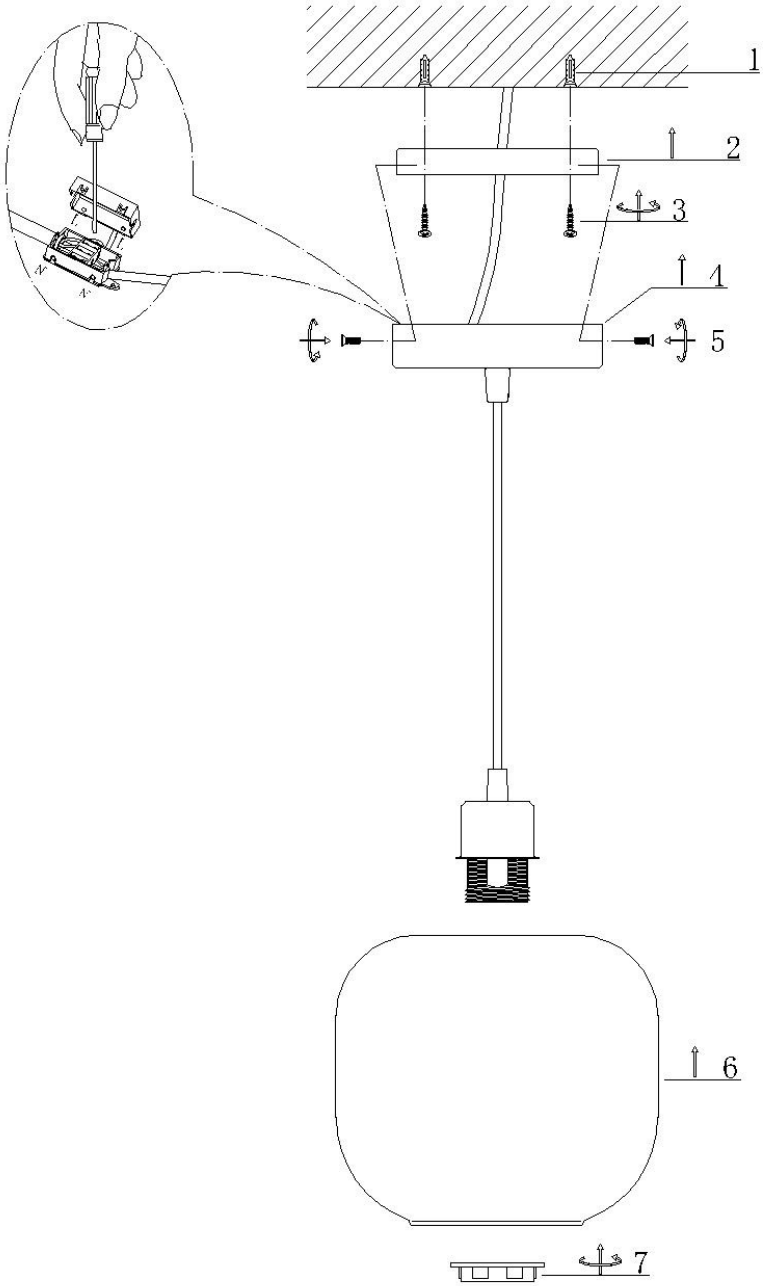2 x 42W Max E27 ES (required)
Dimmable
FCL-25688X2