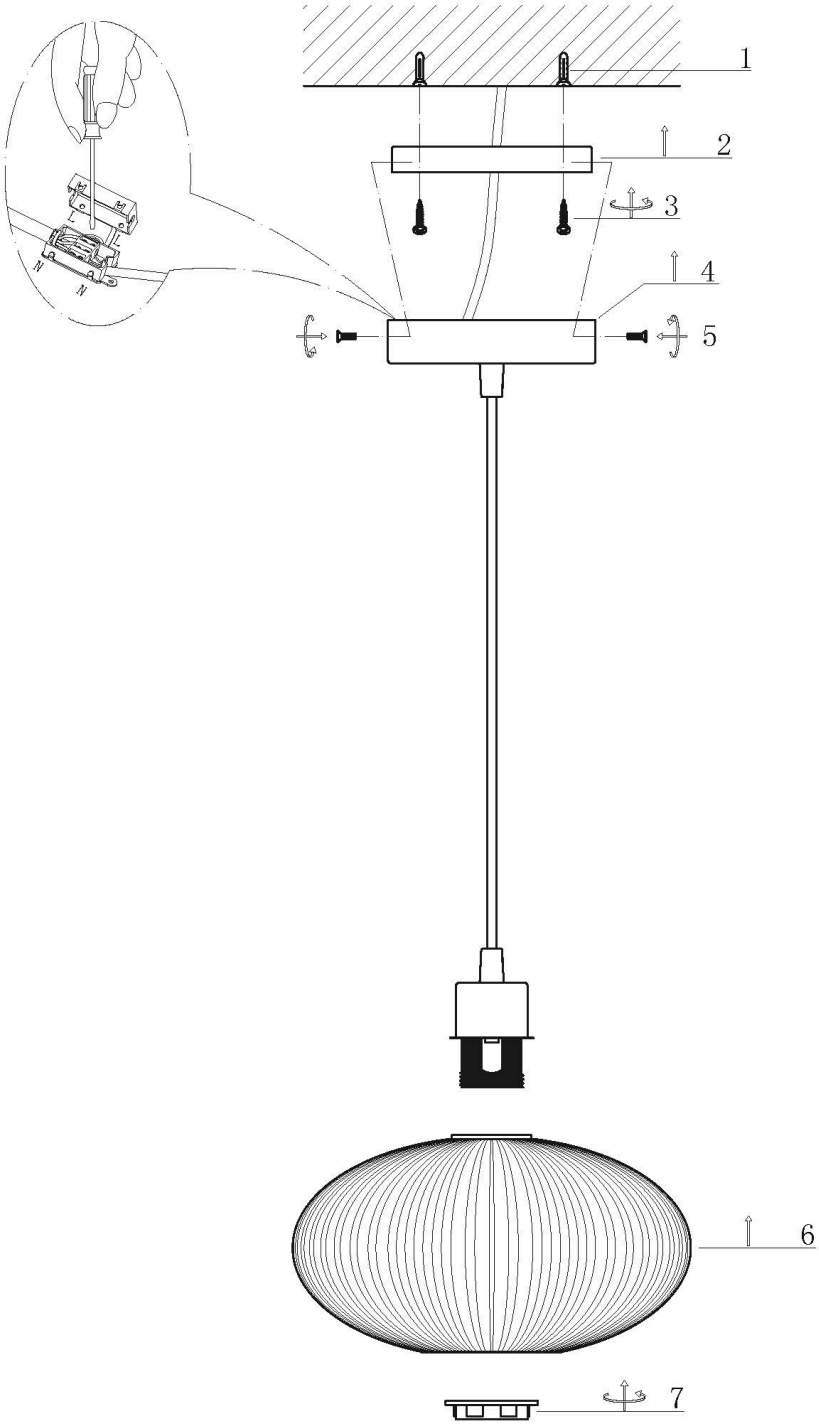42W Max E27 ES (required)
Dimmable
FCL-25695_28211