FCL-26057_30096X2

Set of 2 Brea - Chrome Wall Lights with Burgundy Fern Shades

LIGHT SOURCE DATA

- 2 x 40W Max E14 SES (required)
- Lamp shape - Standard
- Dimmable
- Energy class: Not applicable

DIMENSION DATA

- Height 150mm
- Width 100mm
- Depth 150mm

- Weight 0.80kg

SPECIFICATION

- Manufacturer warranty for 2 years from date of purchase
- Polished chrome plate and burgundy cotton with gold inner detail
- IP20
- No
- Class II - Double Insulated, No Earth
- 240V
- Assembly required? No
- UKCA Marking, Energy Efficient, Energy Saving

CERTIFICATION

CONTACT

www.firstchoicelighting.co.uk info@firstchoicelighting.co.uk

FCL-26057_30096X2

Set of 2 Brea - Chrome Wall Lights with Burgundy Fern Shades

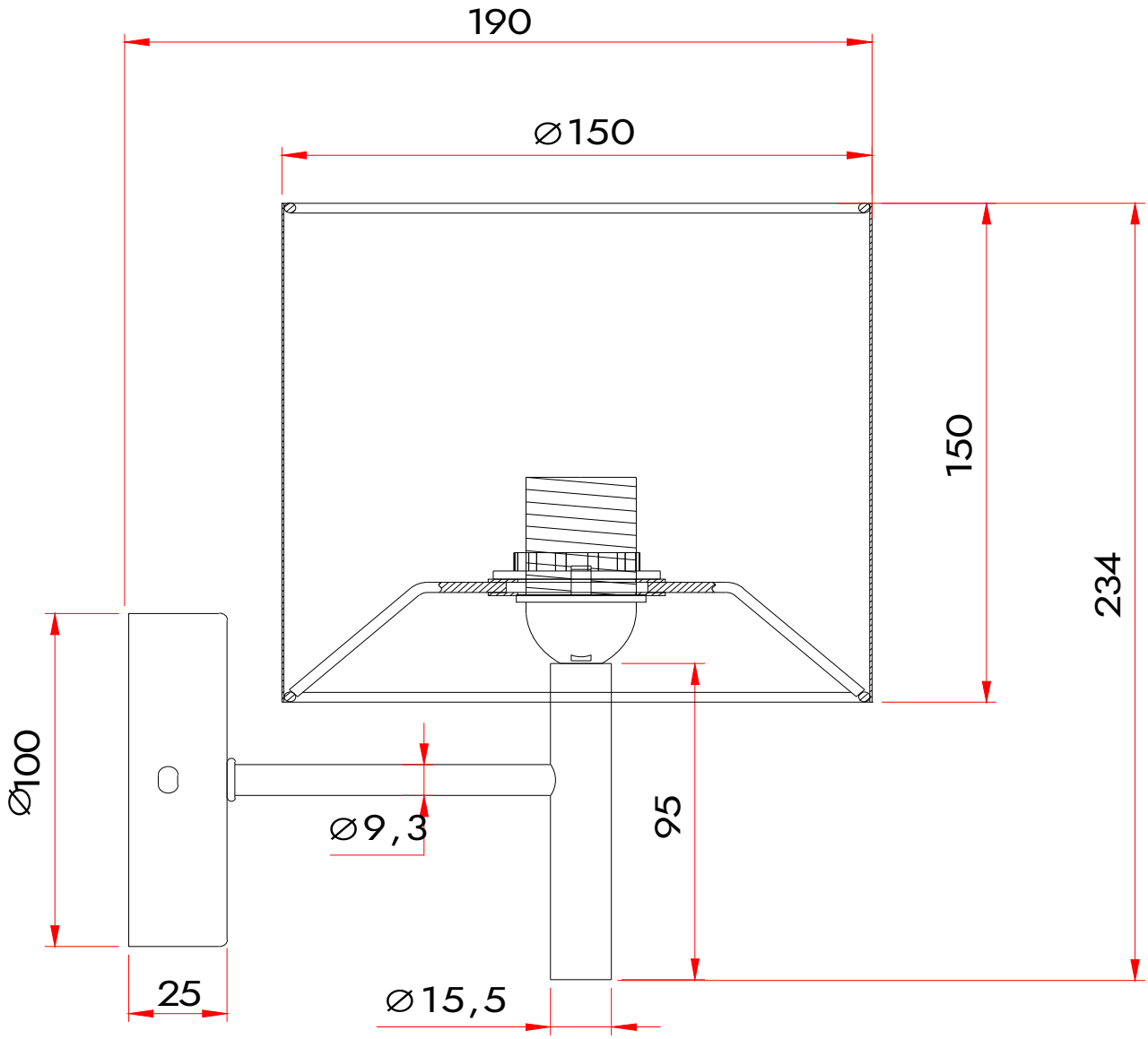

CERTIFICATION

IP20 240V UKCA dim

CONTACT

www.firstchoicelighting.co.uk info@firstchoicelighting.co.uk