3 x 40W Max E14 SES (required)
Dimmable
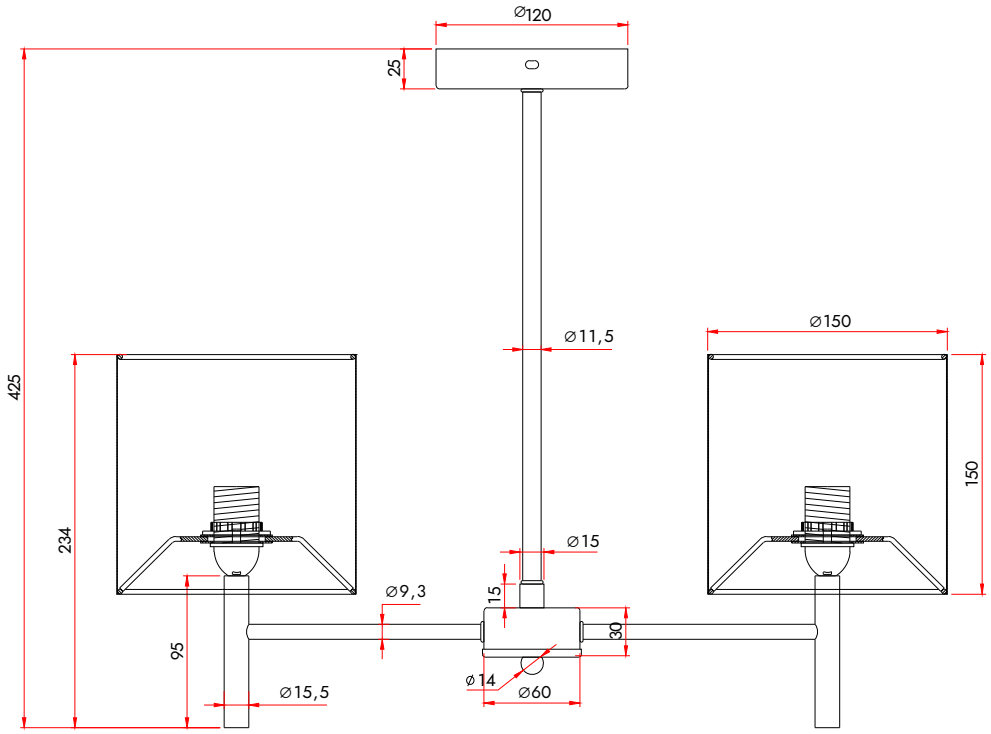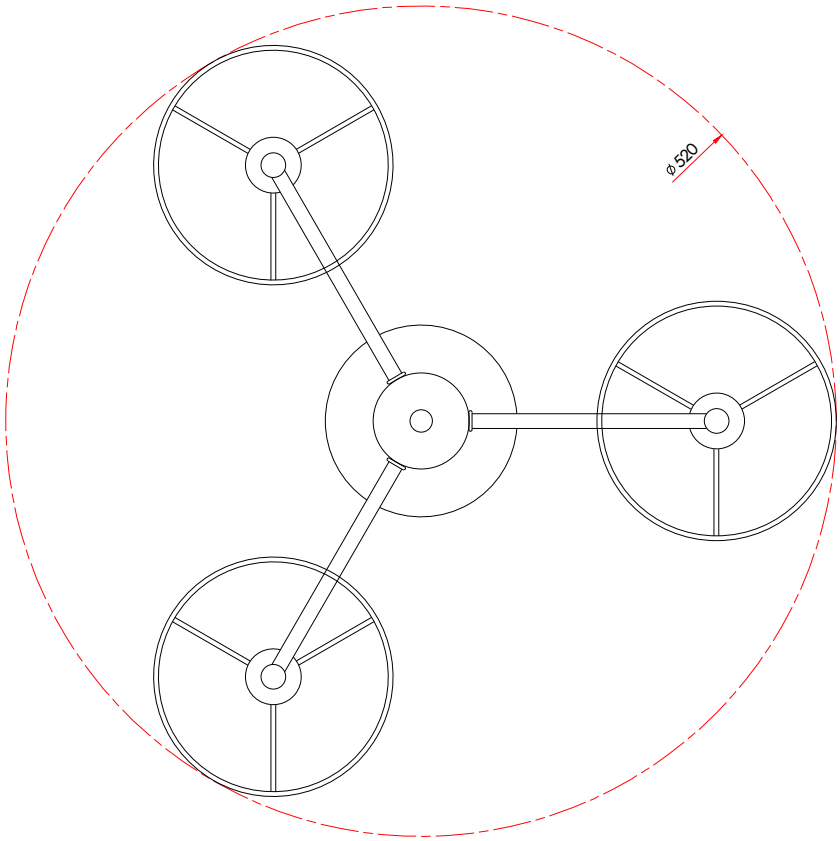
FCL-26058_13531