www.firstchoicelighting.co.uk
info@firstchoicelighting.co.uk

dimension diagram - 05/03/2025

6 x 40W Max E14 SES (required)
Dimmable
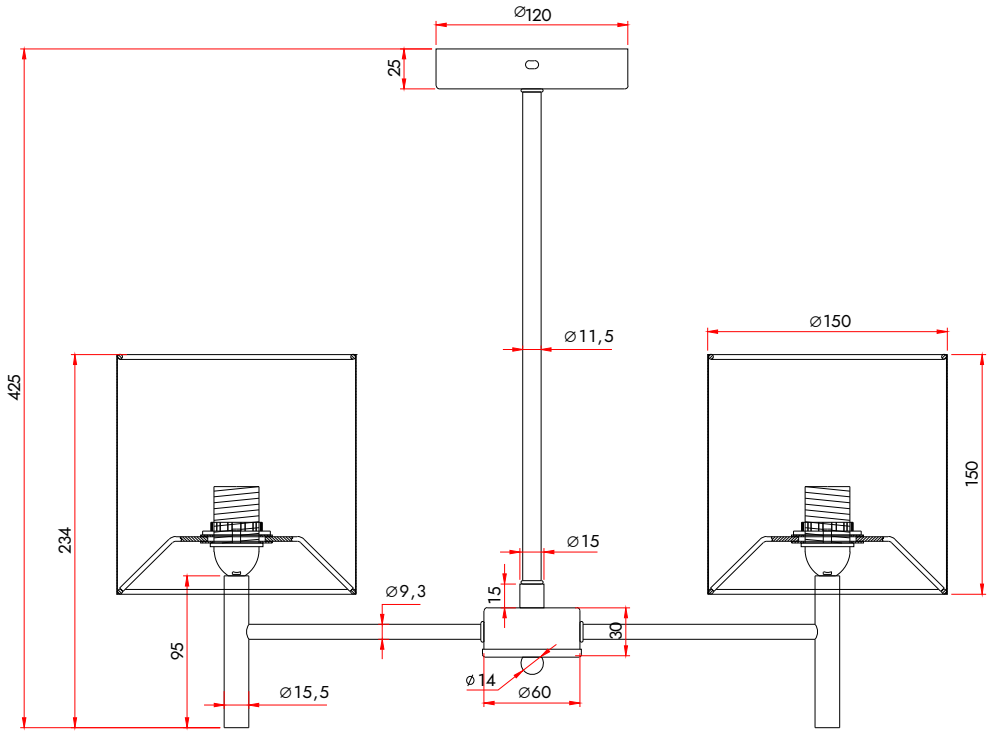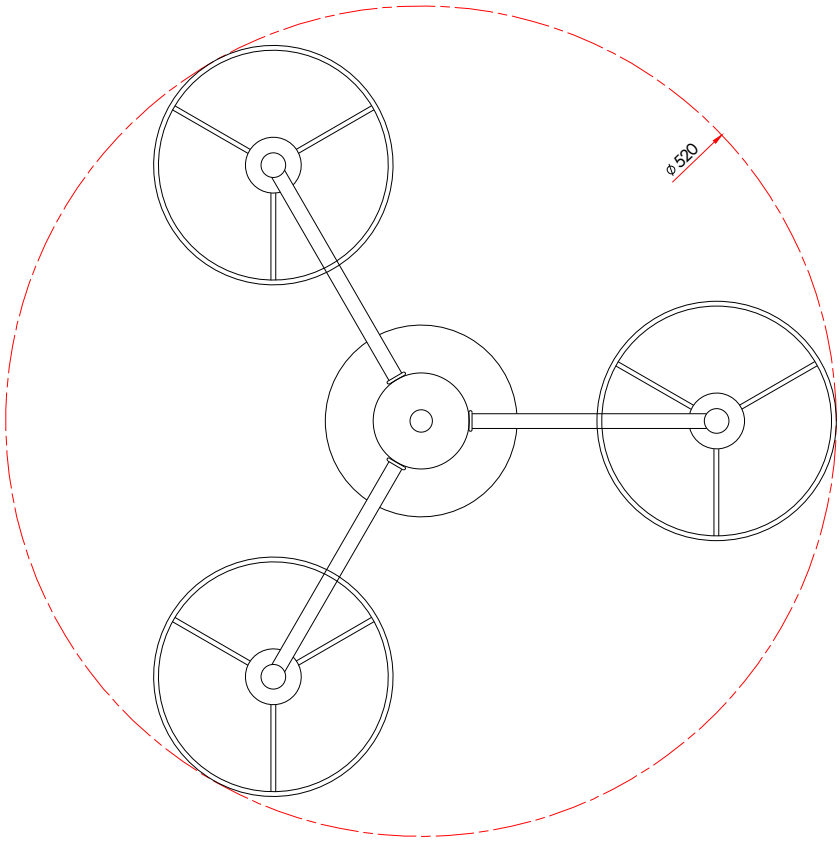
FCL-26058_13543X2