FCL-26128_25657

Aura - Chrome Table Lamp with Safari Velvet Shade

LIGHT SOURCE DATA

- 42W Max E27 ES (required)
- Lamp shape - Standard
- Non-dimmable
- Energy class: Not applicable

DIMENSION DATA

- Height 545mm
- Diameter 300mm
- Weight 1.00kg

SPECIFICATION

- Manufacturer warranty for 2 years from date of purchase
- Polished chrome plate with clear glass detail and safari velvet digital print
- IP20
- In-line On/Off Switch
- Class II - Double Insulated, No Earth
- 240V
- Assembly required? No
- Black 1.5m cable to plug
- UKCA Marking, Energy Efficient, Energy Saving

CERTIFICATION

CONTACT

www.firstchoicelighting.co.uk

info@firstchoicelighting.co.uk

FCL-26128_25657

Aura - Chrome Table Lamp with Safari Velvet Shade

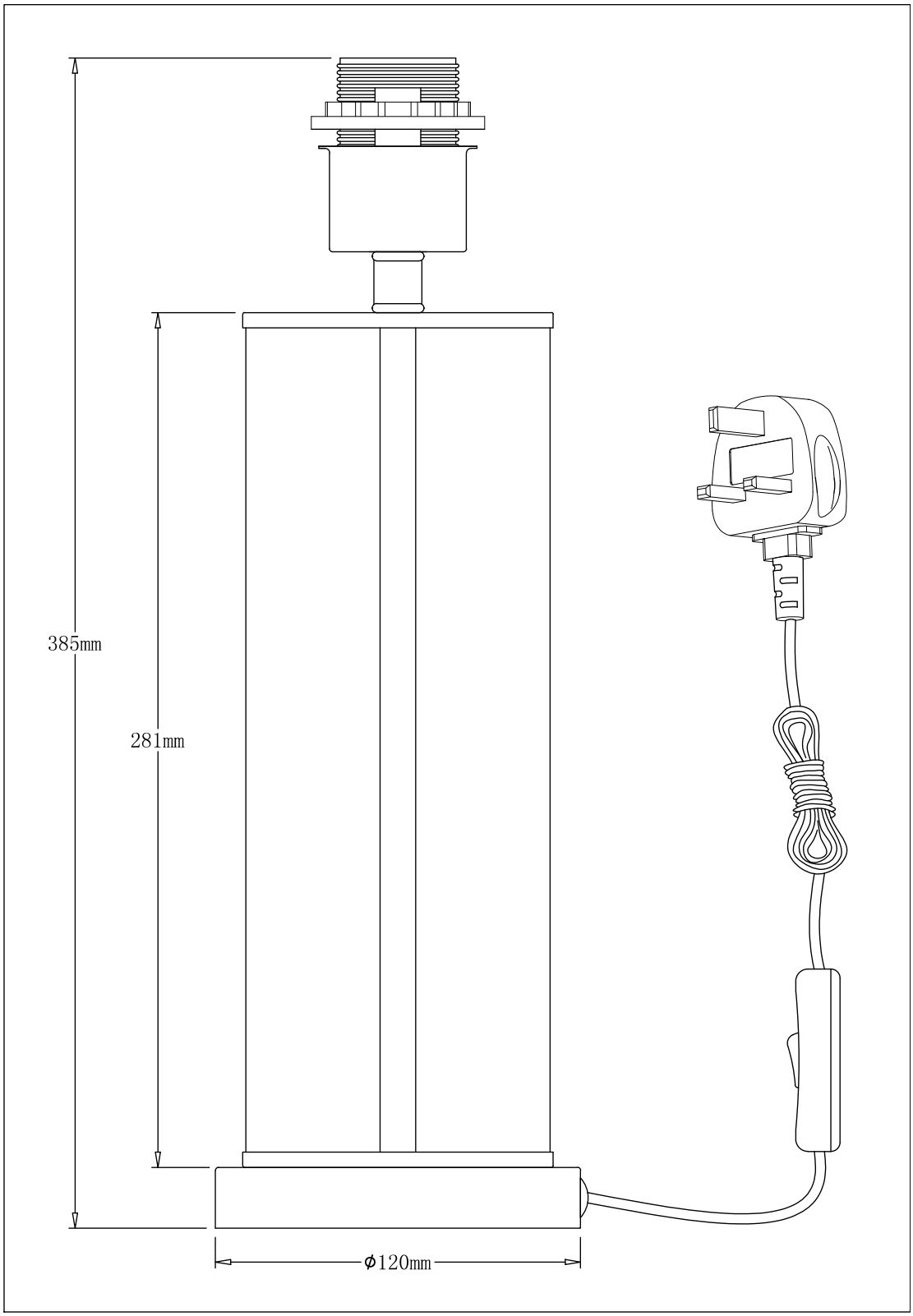

CERTIFICATION

CONTACT

www.firstchoicelighting.co.uk info@firstchoicelighting.co.uk