www.firstchoicelighting.co.uk
info@firstchoicelighting.co.uk

dimension diagram - 05/03/2024

2 x 60W Max E27 ES (required)
Dimmable
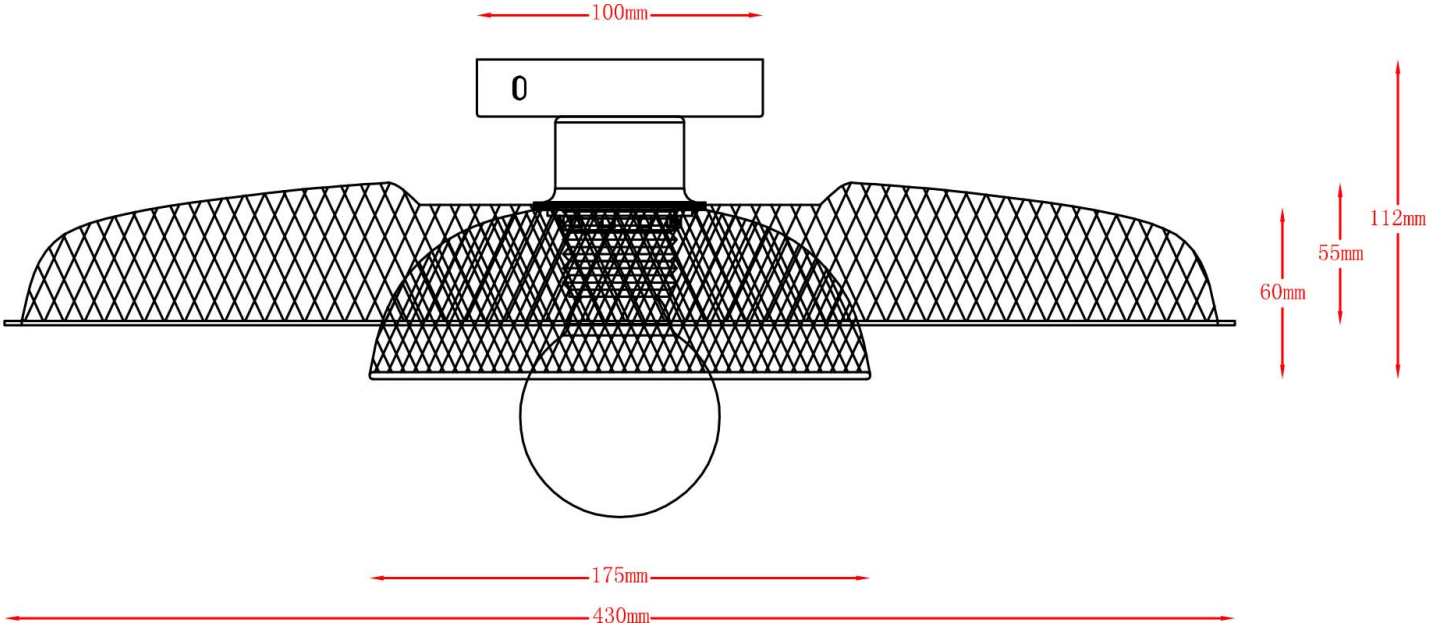
FCL-27115mu2flX2