60W Max E27 ES (required)
Non-dimmable

FCL-28519_25670

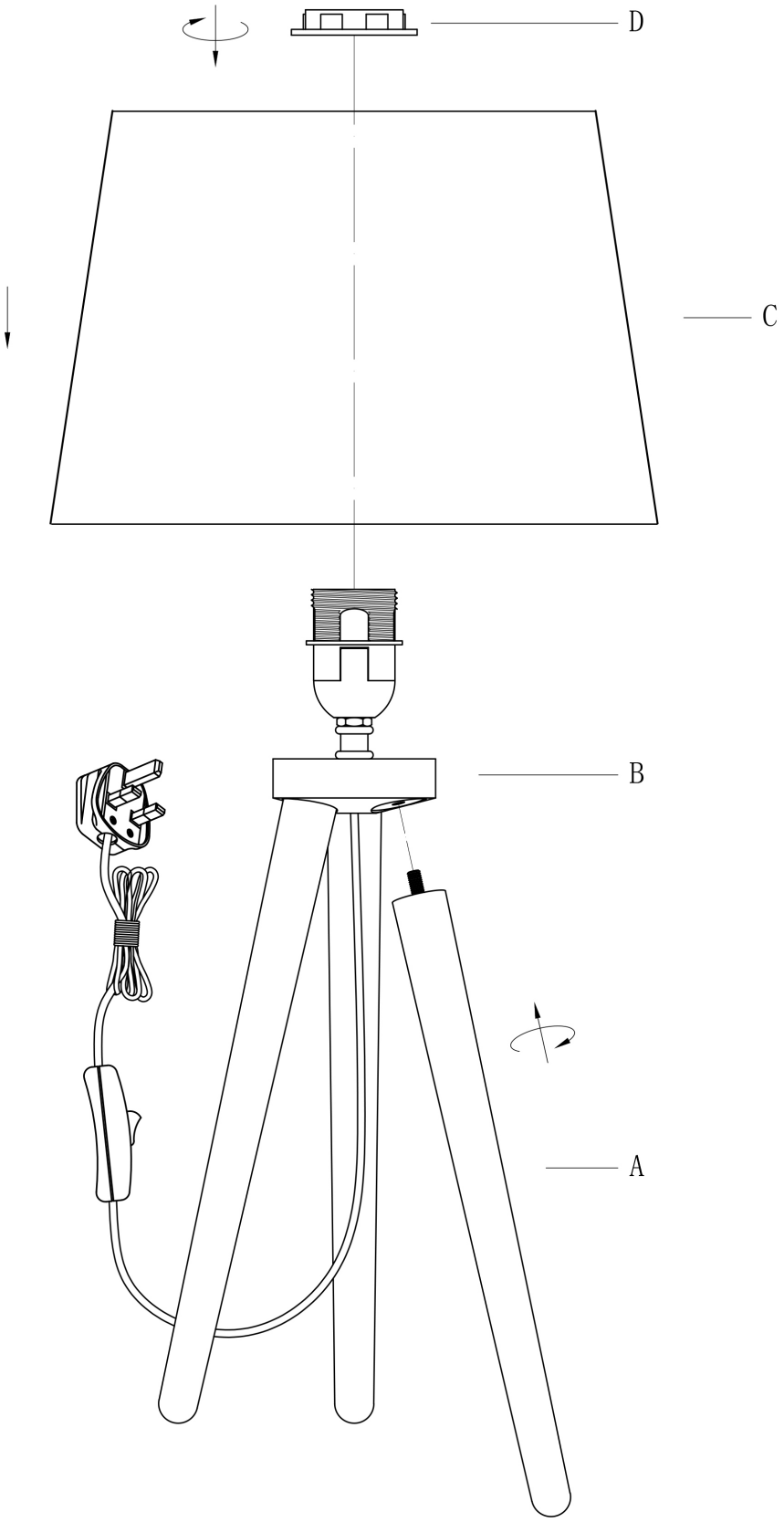

ip20 240V UK CA dim