ELLEN MINI | TABLE LAMP | BORDEAUX

2213745002

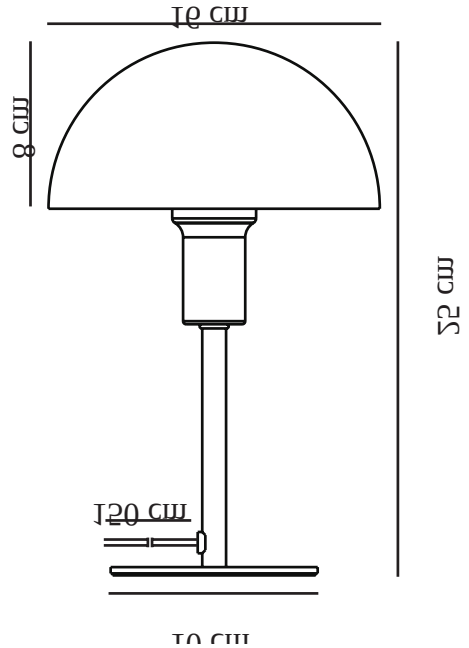

Voltage (V): 220-240 Volt
IP degree: IP20
Maximum bulb wattage (W): 40W
Class (Class 1, Class 2, Class 3): Class 2 (Double isolated)
Socket type: E14
Switch placement: On the cable
Parallel connection: False

Primary material: Metal
Secondary material: Plastic
Colour of the cable: Clear
Length of the cable (cm): 150
Surface material of the cable: Plastic
Is the cable replaceable: False
Colour: Bordeaux

Height (cm): 25
Width (cm): 16
Tube Diameter (cm): 1.15
Shade Diameter (cm): 16
Outdoor base dimension (cm): 10
Lenght (cm): 16

EAN: 5704924024207
TUN: 2439862
Item Number: 2213745002
Pcs Per Master Carton: 4

Sales Box Height (cm): 26
Sales Box Width(cm): 17.5
Sales Box Depth (cm): 17.5
Sales Box Volume m³ : 0.008
Product net weight (kg): 0.65

• Miniature version that is perfect for smaller spaces • Contemporary and elegant design
• Creates a soft downlight

With references to minimalist and timeless Scandinavian design, Ellen fits beautifully into most interior designs. This colourful “mini version” is perfect for lighting up a shelf, window ledge, children’s room or any area where space is limited.