www.firstchoicelighting.co.uk
info@firstchoicelighting.co.uk
assembly instruction - 24/11/2025
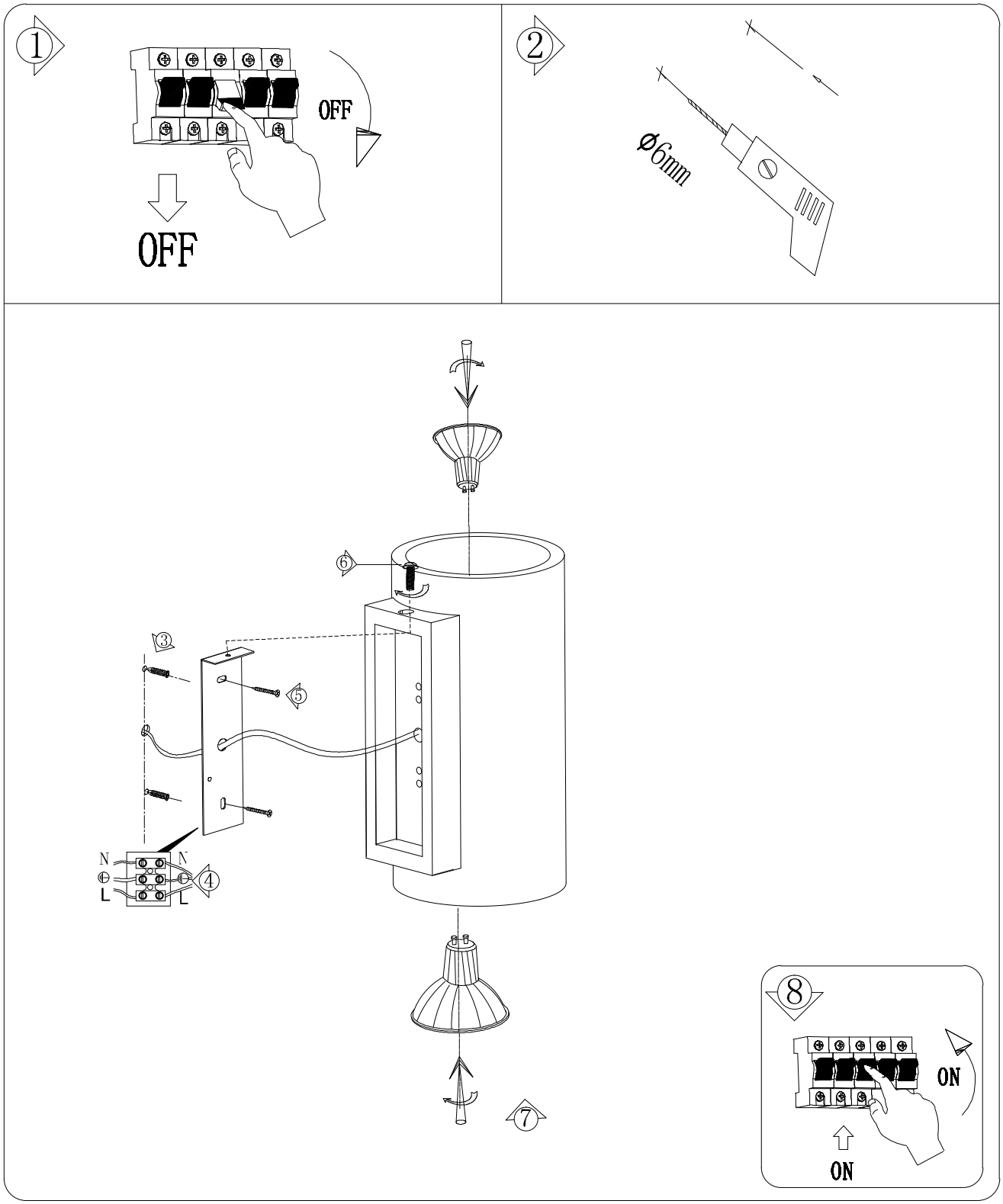
4 x 40W Max GU10 Halogen (required)
Dimmable
FCL-30572X2