FCL-31134

Benni - Natural Linen 26cm Pendant Shade

LIGHT SOURCE DATA

- 60W Max B22 BC or E27 ES (required)
- Lamp direction - Indirect
- Lamp shape - Standard
- Dimmable
- Energy class: Not applicable

DIMENSION DATA

- Height 160mm
- Diameter 260mm
- Weight 0.40kg

SPECIFICATION

- Manufacturer warranty for 2 years from date of purchase
- Natural linen
- IP20
- No
- 240V
- Assembly required? No
- UKCA Marking, Energy Efficient, Energy Saving

CERTIFICATION

CONTACT

www.firstchoicelighting.co.uk info@firstchoicelighting.co.uk

FCL-31134

Benni - Natural Linen 26cm Pendant Shade

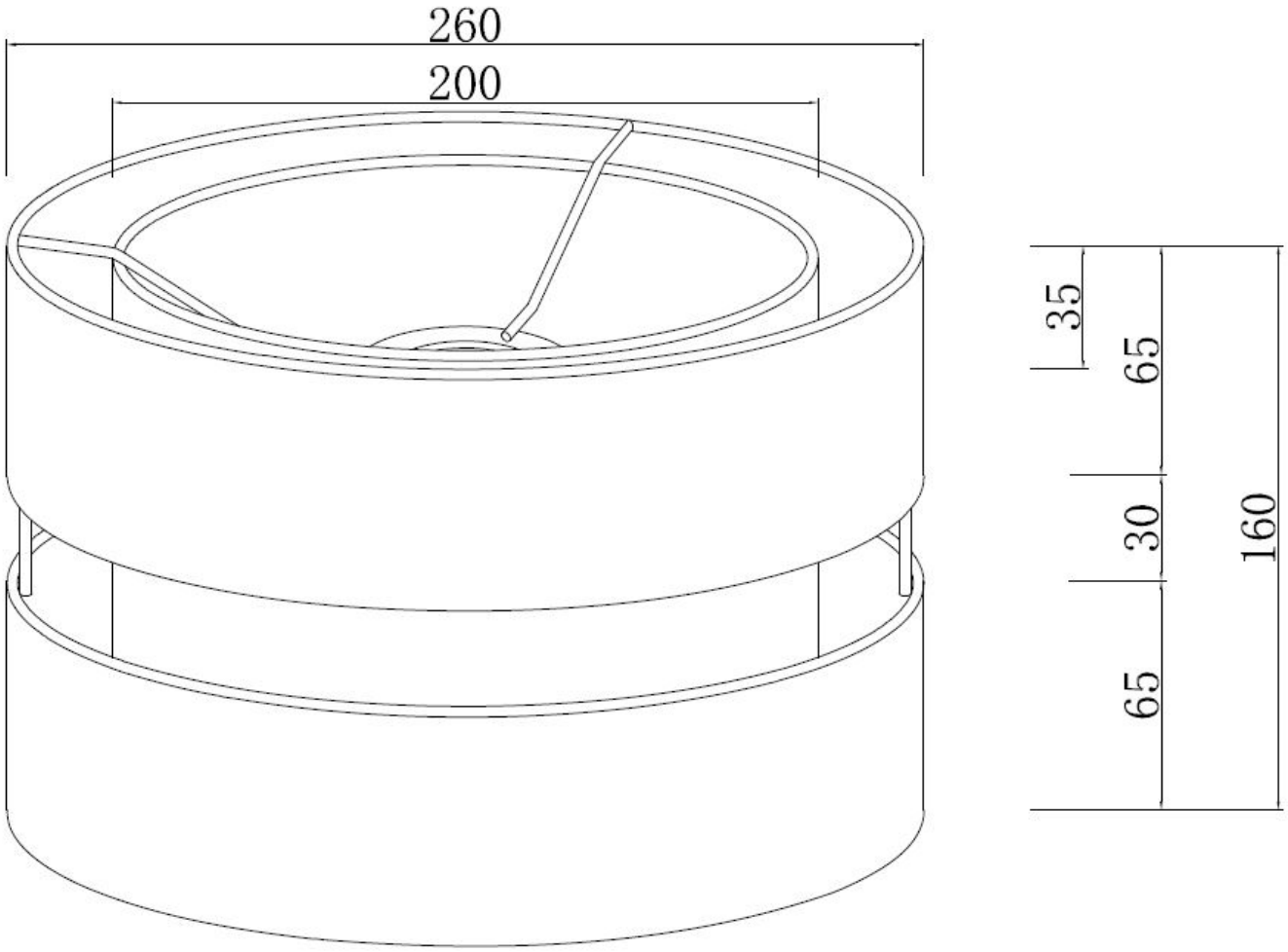

CERTIFICATION

IP20 240V UKCA dim

CONTACT

www.firstchoicelighting.co.uk info@firstchoicelighting.co.uk